SYSTEM WIRING DIAGRAMS
Cruise Control Circuit
1993 Mercedes-Benz 300D

For DIAKOM-AUTO http://www.diakom.ru Taganrog support@diakom.ru (8634)315187

Copyright © 1998 Mitchell Repair Information Company, LLC
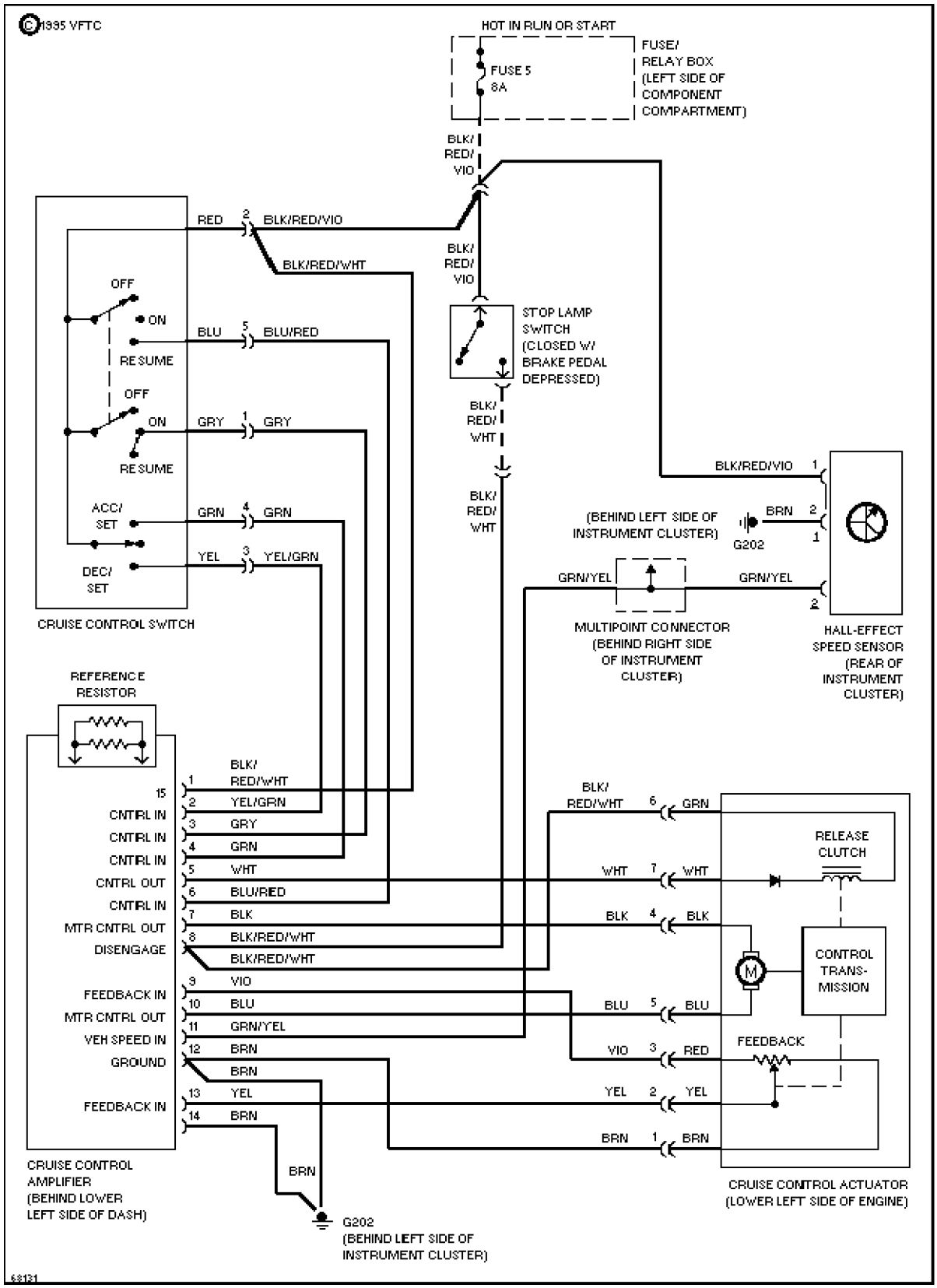
Friday, December 01, 2000 12:39PM